ZAPAK

ZP93B/ZP97A BRUSHLESS COMBINATION STRAPPING TOOL (08.09.2024)

©2019 PANTECH INTERNATIONAL INC. ALL RIGHTS RESERVED
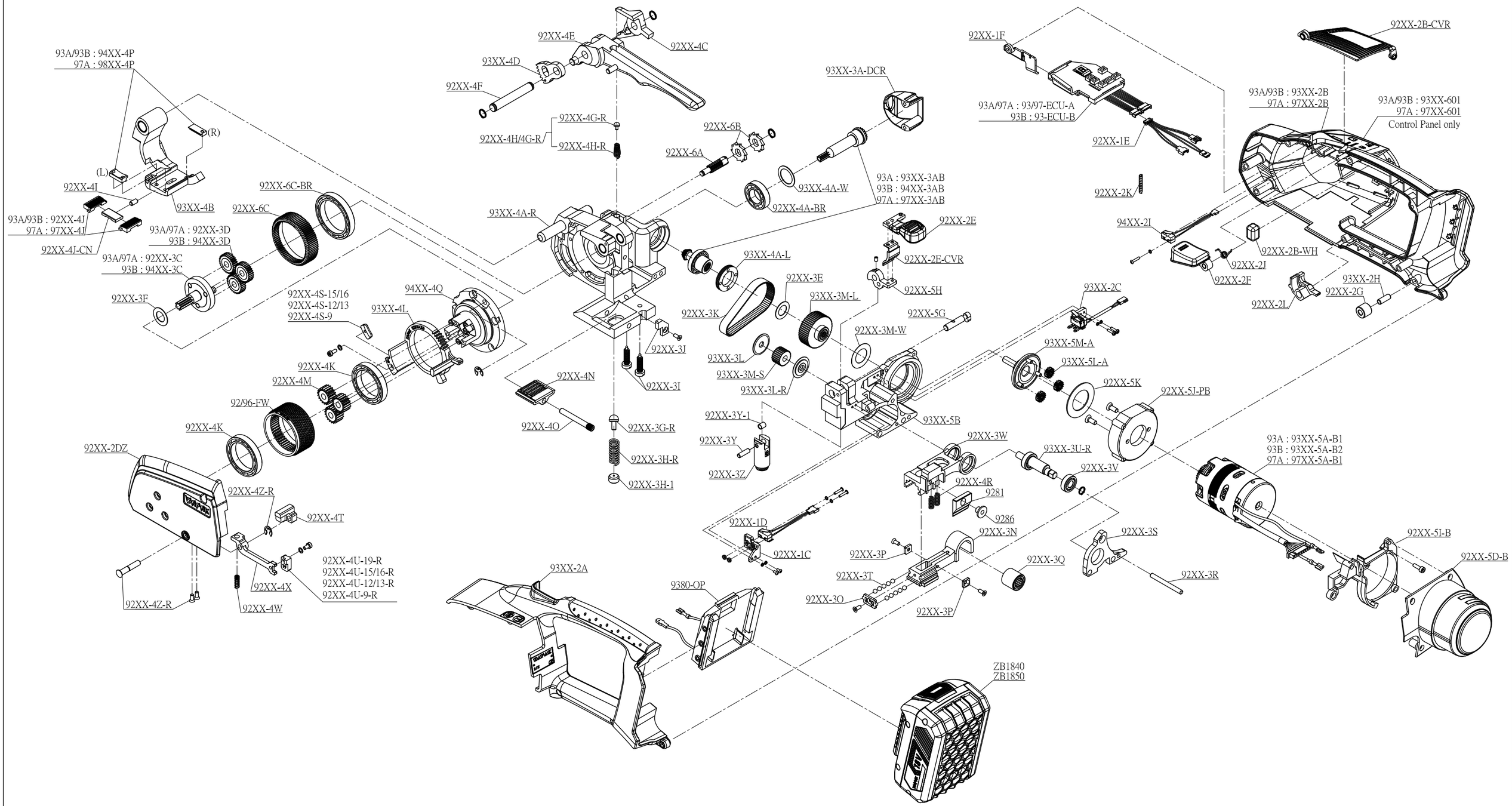
*FOR AUTHORIZED DEALER ONLY